Overhaul kit | Code number 027H4181
ICM, size 40B

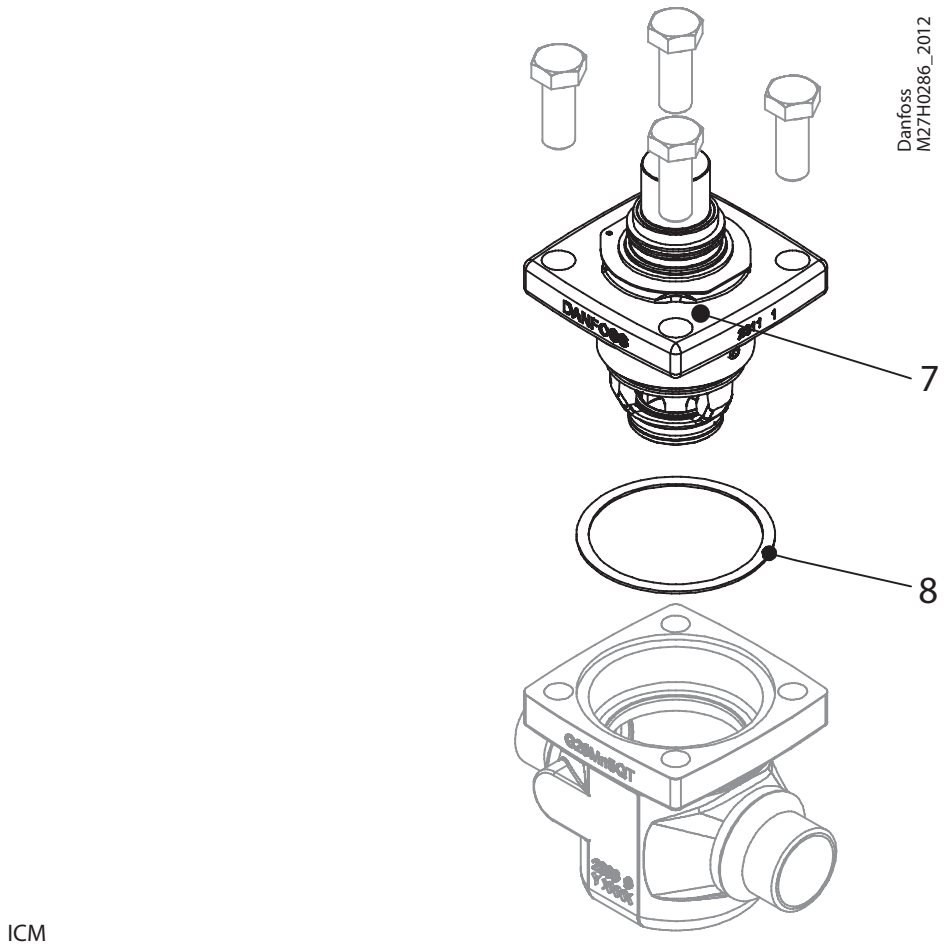

ICM

8

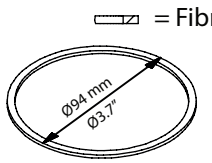

Total no. = 1

7

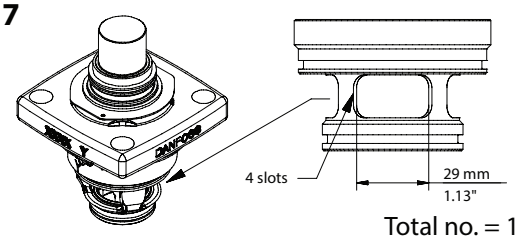

Total no. = 1